info@snasportsgroup.com / (800)823-0182 /
www.SNAsportsgroup.com

SNA Sports Shot Clock Bracket

1- and 2-Sided Clock

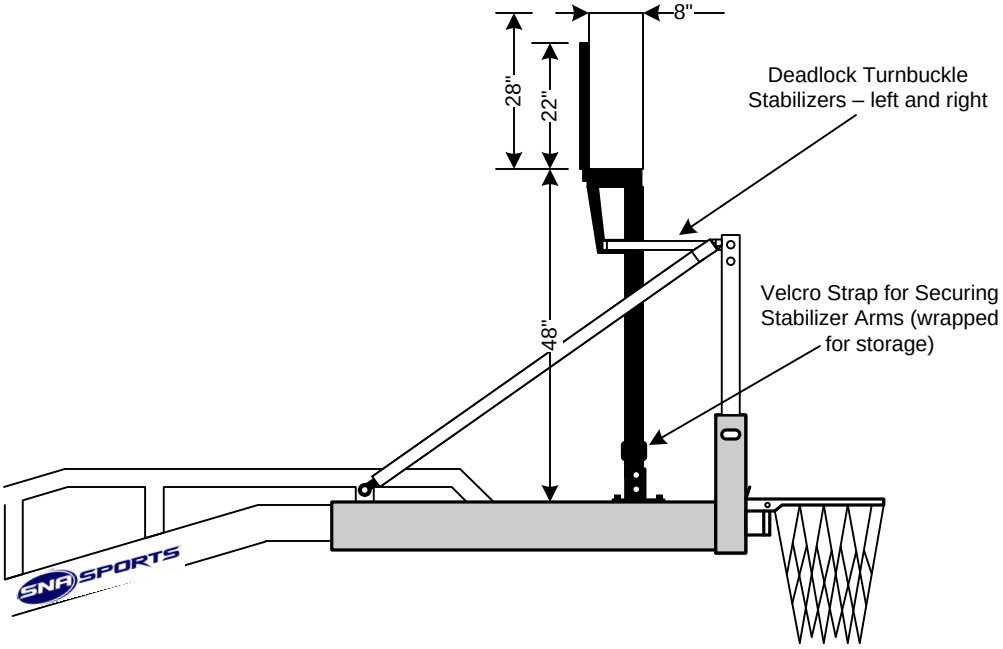

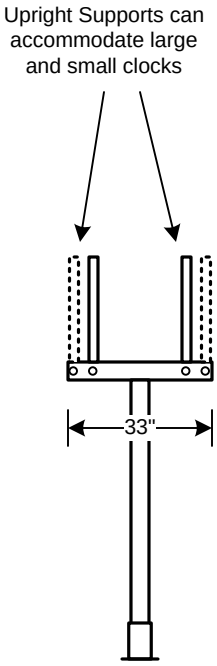

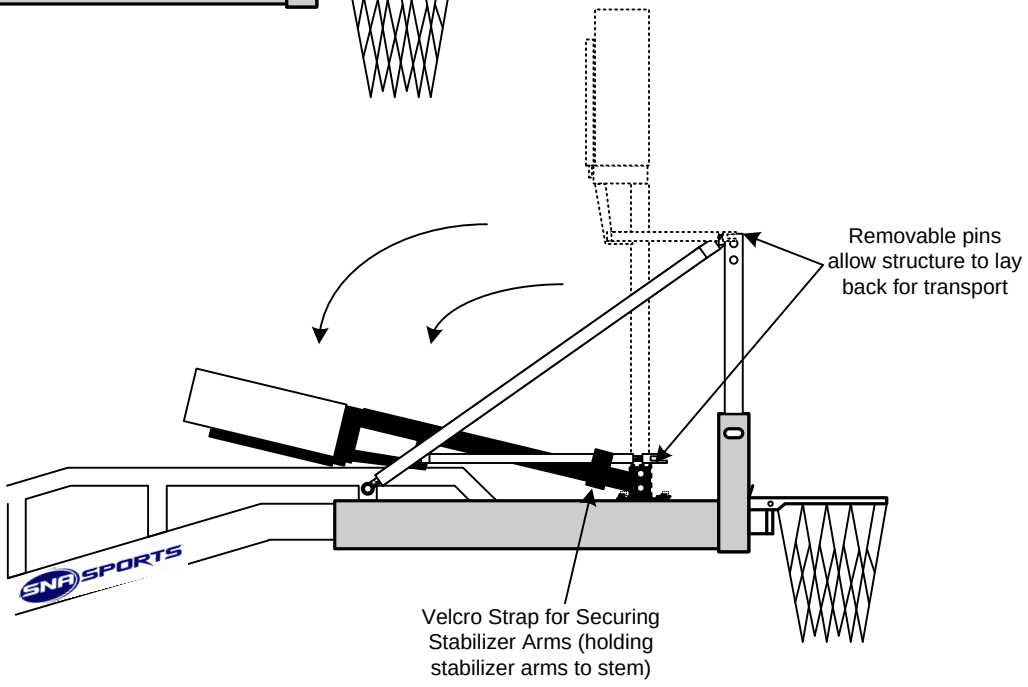

THIS DOCUMENT CONTAINS PROPRIETARY INFORMATION AND IS NOT TO BE USED OR DUPLICATED IN ANY MANNER WITHOUT PRIOR WRITTEN APPROVAL OF S.N.A. SPORTS GROUP